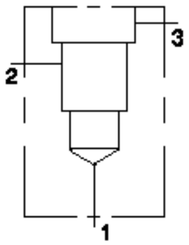

Technical Data	U.S. Units	Metric Units
Cavity	T-9A	
Body Features	Ninety degree	
Body Type	Line mount	
Interface	None	
Open Cavity Quantity	1	
Weight	0.556 lb.	0,252 kg.
Mounting Hole Diameter	.34 in.	8.6 mm
Mounting Hole Depth	Through	
Mounting Hole Quantity	2	

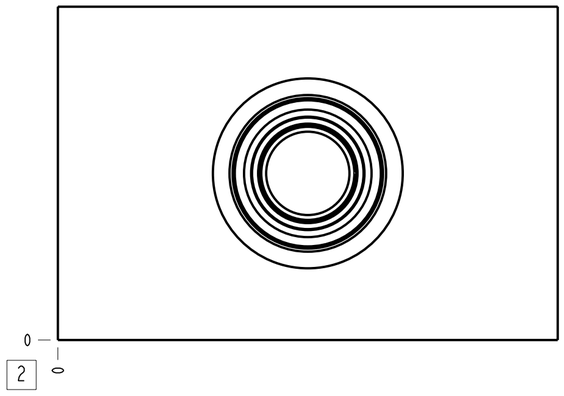

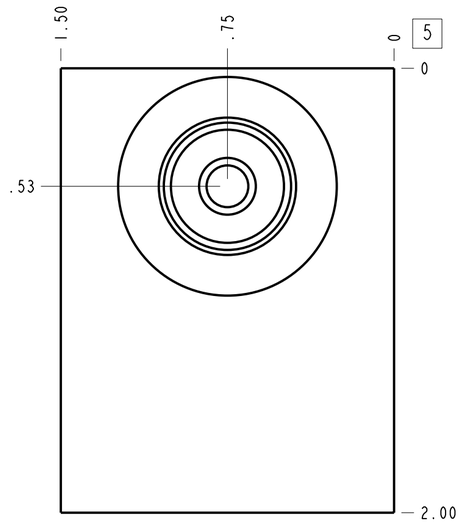

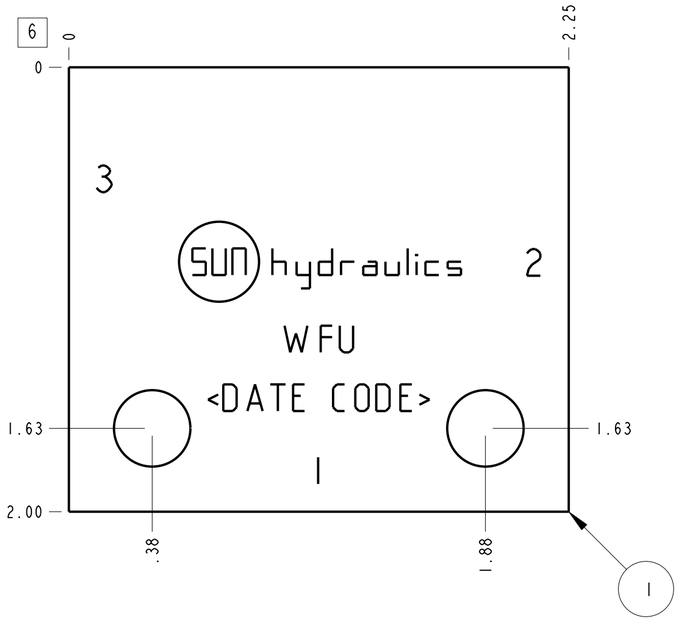

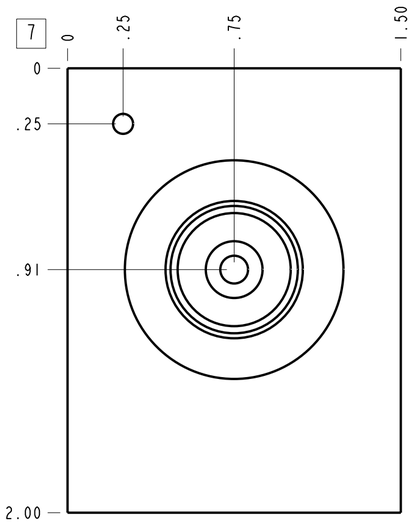

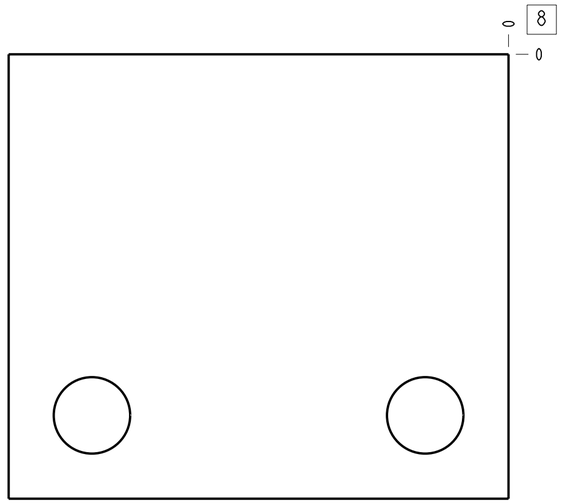

Notes

1. Important: Carefully consider the maximum system pressure. The pressure rating of the manifold is dependent on the manifold material, with the port type/size a secondary consideration. Manifolds constructed of aluminum are not rated for pressures higher than 3000 psi (210 bar), regardless of the port type/size specified.
2. This drawing is for reference only. It is generated by an automated process and does not fall under Sun's document control process.

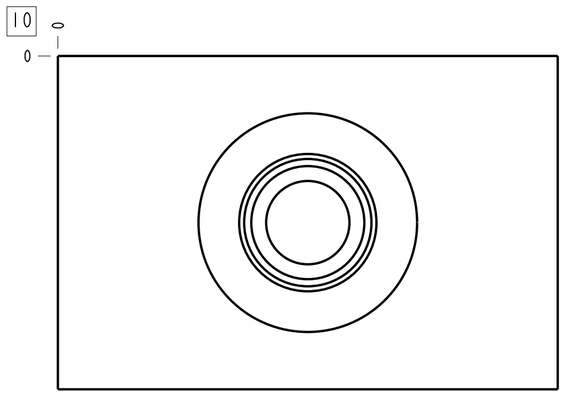

Port Headings		
Product	Port	Size
WFU	All Ports	SAE 6

ITEM	PART NO.	SETTING	MATERIAL	PART NAME	QTY
1	152-708-004		6061-T6 ALUMINUM	BODY	1

MODEL: WFU	ALL DIMENSIONS IN INCH VIEWS ARE THIRD ANGLE			FIRST ANGLE	THIRD ANGLE
DESCRIPTION: T-9A Line mount Ninety degree	DATE: Mar-12-25	SCALE: 1.897	DWG SIZE: C	SHEET: 1	sun hydraulics®